INSTALLATION

1. INSTALL RACK & PINION POWER STEERING GEAR ASSEMBLY

(a) Install the power steering gear assembly with the 4 bolts and nuts.
Torque: 58 N*m (590 kgf*cm, 43 ft.*lbf)
NOTICE:
- **The 4 bush must be securely installed to the power steering gear assembly.**
- **When tightening the installation bolt for power steering gear, the bush should not bitten in.**

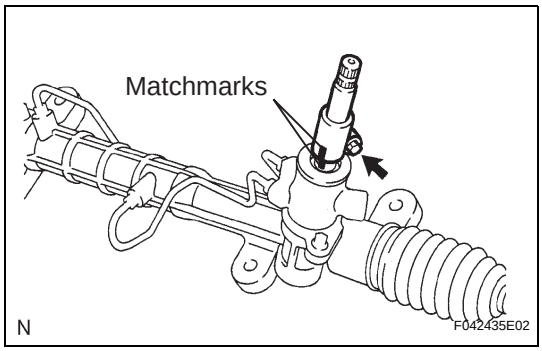

2. INSTALL STEERING INTERMEDIATE SHAFT

(a) Align the matchmarks on the steering intermediate shaft with steering pinion shaft.
(b) Install the bolt.
Torque: 35 N*m (360 kgf*cm, 26 ft.*lbf)

3. INSTALL STEERING COLUMN HOLE COVER SUB-ASSEMBLY NO. 1

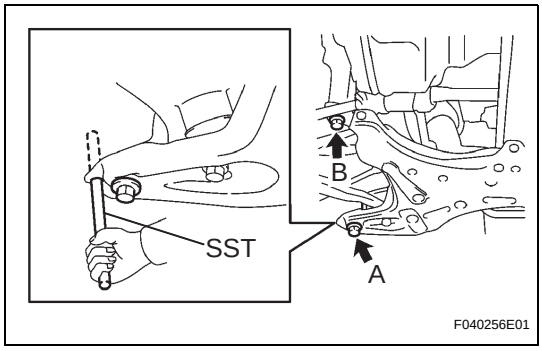

4. INSTALL FRONT SUSPENSION CROSSMEMBER SUB-ASSEMBLY

(a) Using SST, align the holes of the front suspension member RH and body, and temporarily tighten the bolt in order of A, B.
SST 09670-00010

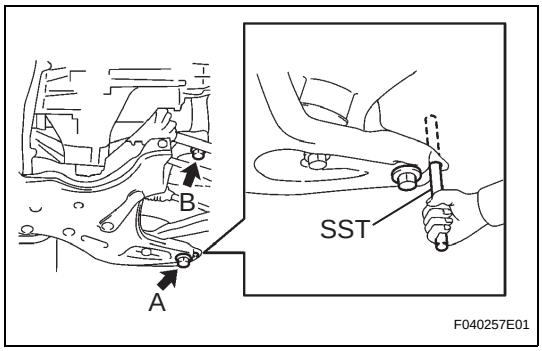

(b) Using SST, align the holes of the front suspension member LH and body, and temporarily tighten the bolt in order of A, B.
SST 09670-00010
(c) Using SST, align the holes of the front suspension member RH and body, and torque the bolt A and B.
SST 09670-00010
Torque: Bolt A
157 N*m (1,600 kgf*cm, 116 ft.*lbf)
Bolt B
113 N*m (1,152 kgf*cm, 83 ft.*lbf)
(d) Using SST, align the holes of the front suspension member LH and body, and torque the bolt A and B.
SST 09670-00010
Torque: Bolt A
157 N*m (1,600 kgf*cm, 116 ft.*lbf)
Bolt B
113 N*m (1,152 kgf*cm, 83 ft.*lbf)

cardiagn.com

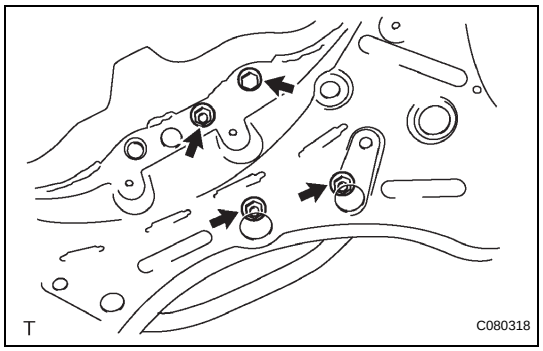

(e) Connect the engine mounting insulator RR to the crossmember with the bolt and 3 nuts.
Torque: 52 N*m (530 kgf*cm, 38 ft.*lbf)

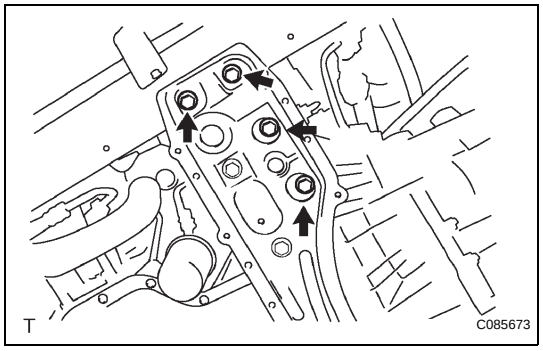

(f) Install the center member to the frame with the 2 bolts.
Torque: 60 N*m (612 kgf*cm, 44 ft.*lbf)

(g) Connect the engine mounting insulator FR to the center member with the 2 bolts.
Torque: 52 N*m (530 kgf*cm, 38 ft.*lbf)

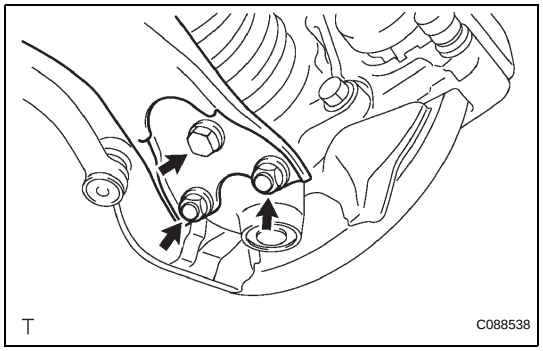

5. CONNECT FRONT SUSPENSION ARM SUB-ASSEMBLY LOWER NO. 1 LH

(a) Connect the front suspension lower arm No. 1 to the lower ball joint with the bolt and 2 nuts.
Torque: 89 N*m (910 kgf*cm, 66 ft.*lbf)

6. CONNECT FRONT SUSPENSION ARM SUB-ASSEMBLY LOWER NO. 1 RH

HINT:
Use the same manner described above to the other side.

7. CONNECT FRONT STABILIZER LINK ASSEMBLY LH

(a) Connect the front stabilizer link assembly LH with the nut.
Torque: 74 N*m (750 kgf*cm, 55 ft.*lbf)

8. CONNECT FRONT STABILIZER LINK ASSEMBLY RH

HINT:
Use the same manner described above to the other side.

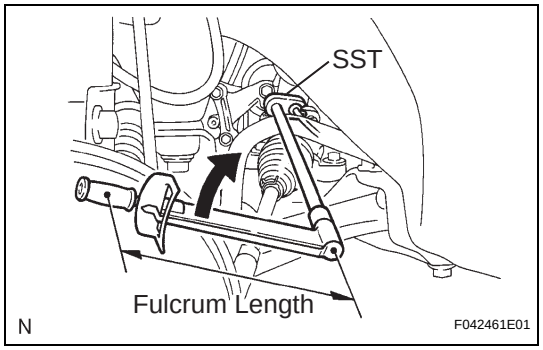

9. CONNECT RETURN TUBE SUB-ASSEMBLY

(a) Using SST, connect the return tube sub-assembly.
SST 09023-38401
Torque: 23 N*m (235 kgf*cm, 17 ft.*lbf)
HINT:
- Use a torque wrench with a fulcrum length of 345 mm (13.58 in.).
- This torque value is effective in case that SST is parallel to a torque wrench.

10. CONNECT PRESSURE FEED TUBE ASSEMBLY

(a) Using SST, connect the pressure feed tube assembly.
SST 09023-38401
Torque: 23 N*m (235 kgf*cm, 17 ft.*lbf)

cardiagn.com

HINT:
- Use a torque wrench with a fulcrum length of 345 mm (13.58 in.).
- This torque value is effective in case that SST is parallel to a torque wrench.

(b) Connect the tube clamp with the bolt.
Torque: 7.8 N*m (80 kgf*cm, 69 ft.*lbf)

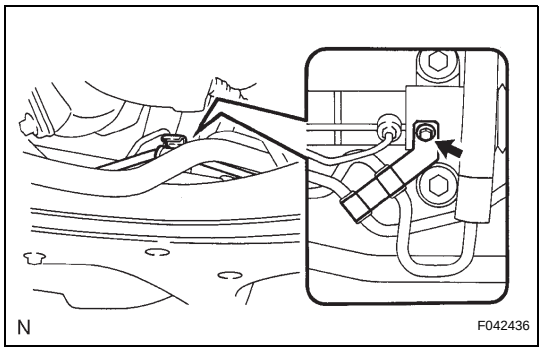

11. CONNECT STEERING INTERMEDIATE SHAFT (See page SR-10)

12. CONNECT TIE ROD END SUB-ASSEMBLY LH
(a) Connect the tie rod end sub-assembly LH with the nut.
Torque: 49 N*m (500 kgf*cm, 36 ft.*lbf)
(b) Install a new cotter pin.
NOTICE:
If the holes for a new cotter pin are not aligned, tighten the nut further up to 60°.

13. CONNECT TIE ROD END SUB-ASSEMBLY RH
HINT:
Use the same manner described above to the other side.

14. INSTALL ENGINE UNDER COVER LH

15. INSTALL ENGINE UNDER COVER RH

16. INSTALL FRONT WHEELS
Torque: 103 N*m (1,050 kgf*cm, 76 ft.*lbf)

17. INSPECT CENTER FRONT WHEEL

18. INSTALL COLUMN HOLE COVER SILENCER SHEET
(a) Install the column hole cover silencer sheet with the 2 nuts.

19. ADD POWER STEERING FLUID

20. BLEED POWER STEERING FLUID (See page PS-2)

21. INSPECT FOR POWER STEERING FLUID LEAK

22. INSTALL CYLINDER HEAD COVER NO. 2
(a) Install the cylinder head cover No. 2 with 2 nuts and 2 clips.
Torque: 7.0 N*m (71 kgf*cm, 62 ft.*lbf)

23. INSTALL HOOD SUB-ASSEMBLY

24. INSPECT HOOD SUB-ASSEMBLY
HINT:
See page ED-1.

25. ADJUST HOOD SUB-ASSEMBLY
HINT:
See page ED-1.

26. CENTER SPIRAL CABLE (See page SR-11)

27. INSTALL STEERING WHEEL ASSEMBLY (See page SR-11)

28. INSTALL STEERING PAD (See page RS-275)

cardiagn.com

29. INSPECT AND ADJUST FRONT WHEEL ALIGNMENT

HINT:

See page SP-4.

30. INSPECT SRS WARNING LIGHT

HINT:

See page RS-26.

cardiagn.com